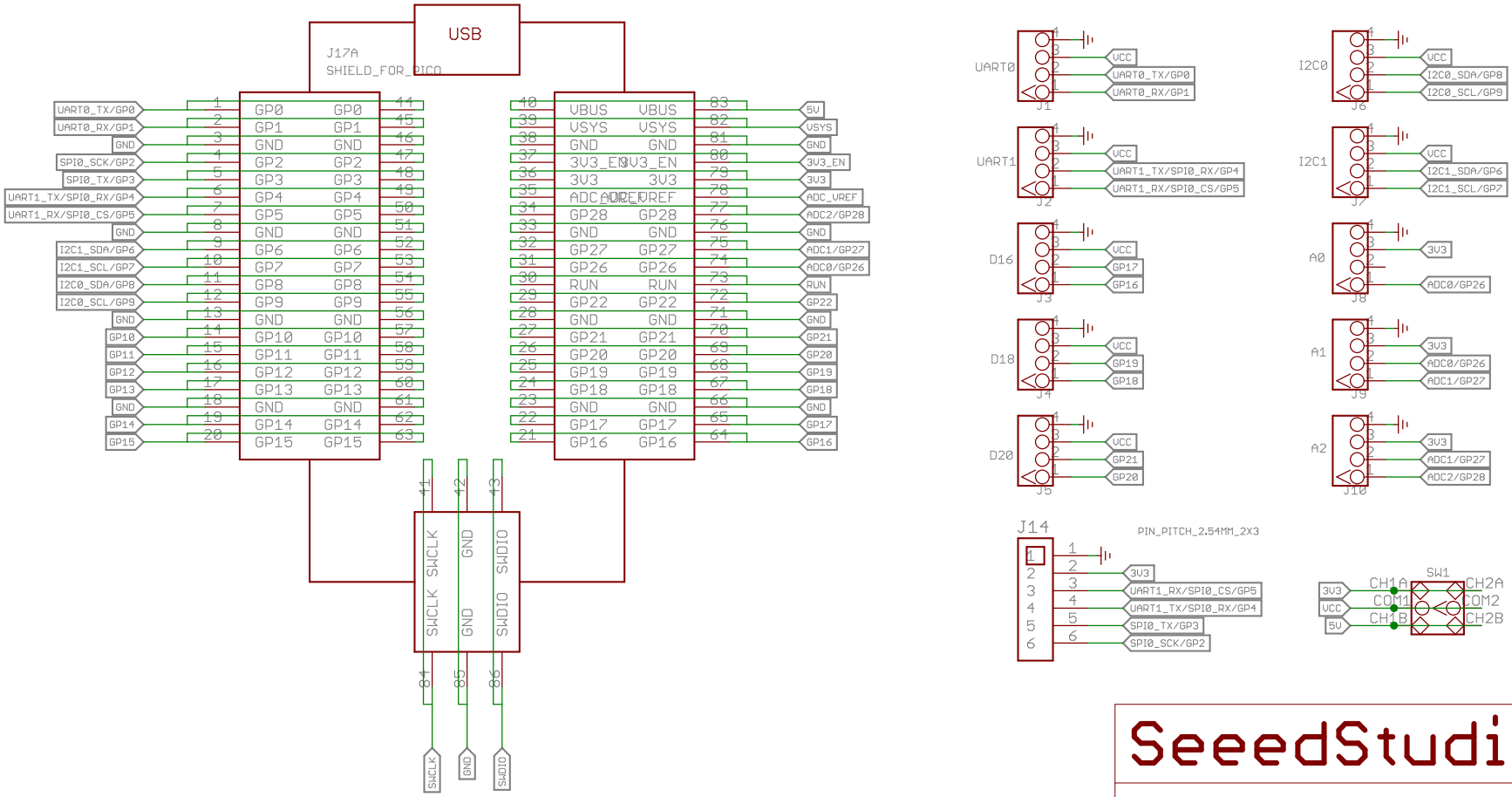

SeeedStudio

TITLE: Grove_shield_for_PI PICO v1.0

Design: Jim zhou	Check:	
Date: 2021/01/20	Vision: v1.0	Sheet: 1/1

2021/1/28 9:41:03 f=1.04 E:\New_Project\Grove\Grove shield for Pi Pico\02-sch&pcb\Grove_shield_for_PI PICO v1.0.sch (Sheet: 1/1)